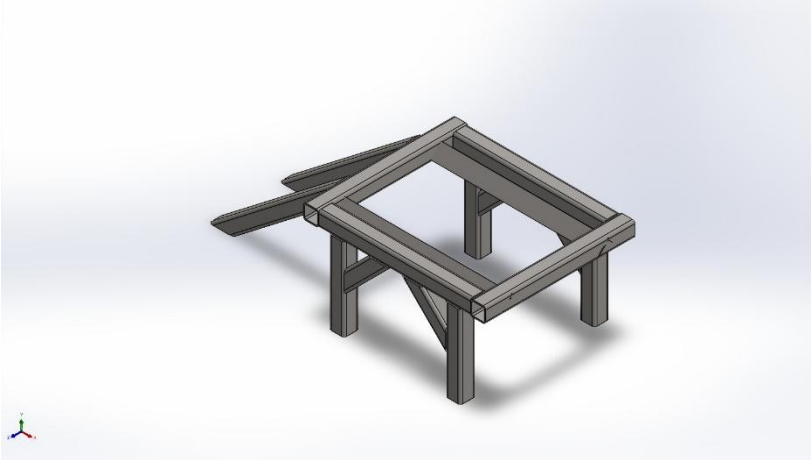

Simulation of Welding bracket

Date: April 21, 2026
Designer: Solidworks
Study name: Response spectrum analysis
Analysis type: Linear dynamic analysis (Response Spectrum Analysis)

Table of Contents

Description 1
Assumptions 2
Model Information 3
Study Properties 7
Units 7
Material Properties 8
Loads and Fixtures 9
Connector Definitions 10
Interaction Information 10
Mesh information 11
Sensor Details 12
Study Results 13
Conclusion 16
Appendix 16

Description

No Data

Assumptions

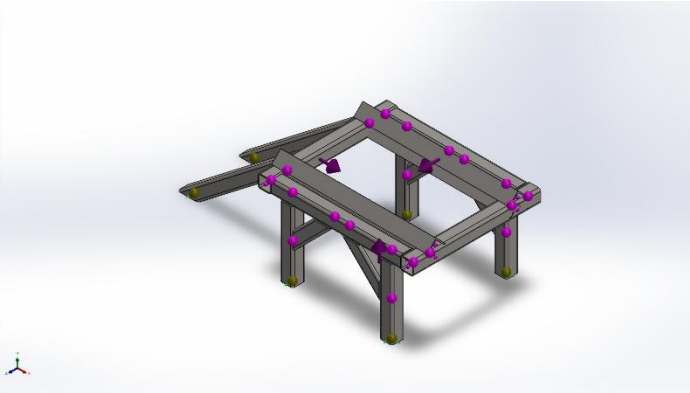

Original Model

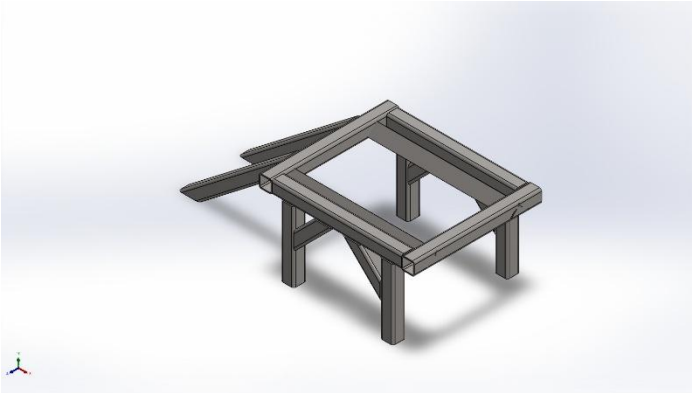

Model Analyzed

Model Information

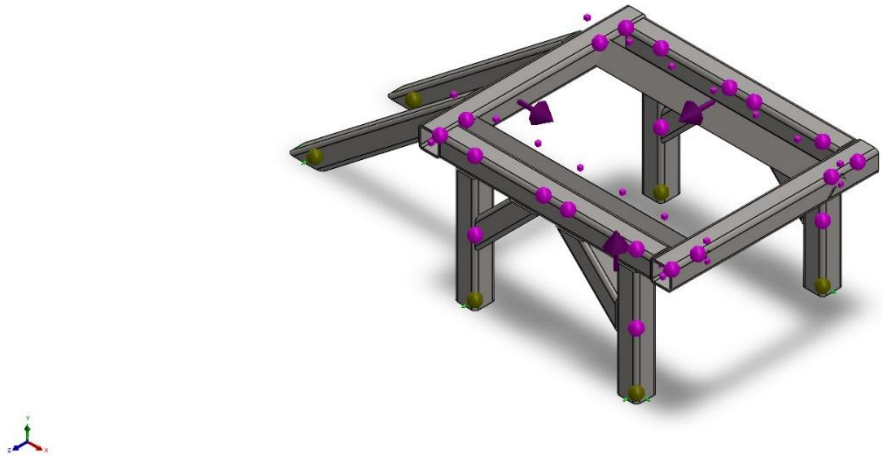

Model name: Welding bracket
Current Configuration: Default

Beam Bodies:

Document Name and Reference	Formulation	Properties	Document Path/Date Modified
SolidBody 1(Imported15) 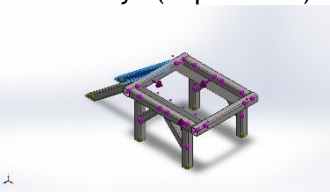	Beam - Uniform C/S	**Section Standard-Custom** **Section Area:** **0.00167035m^2** **Length:722.617mm** **Volume:0.00120702m^3** **Mass Density:7,900kg/m^3** **Mass:9.53545kg** **Weight:93.4474N**	**C:\Users\26869\Desktop\game\Solidwork\resource\model\第 47、48 课\Welding bracket.SLDPRT**
SolidBody 3(Imported16) 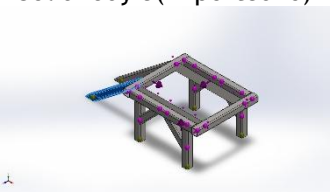	Beam - Uniform C/S	**Section Standard-Custom** **Section Area:** **0.00167035m^2** **Length:722.617mm** **Volume:0.00120702m^3** **Mass Density:7,900kg/m^3** **Mass:9.53545kg** **Weight:93.4474N**	**C:\Users\26869\Desktop\game\Solidwork\resource\model\第 47、48 课\Welding bracket.SLDPRT**
SolidBody 4(Imported1) 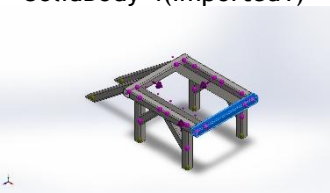	Beam - Uniform C/S	**Section Standard-Custom** **Section Area:** **0.00167035m^2** **Length:749.3mm** **Volume:0.00125159m^3** **Mass Density:7,900kg/m^3** **Mass:9.88759kg** **Weight:96.8984N**	**C:\Users\26869\Desktop\game\Solidwork\resource\model\第 47、48 课\Welding bracket.SLDPRT**
SolidBody 5(Imported9)	Beam - Uniform C/S	**Section Standard-Custom**	**C:\Users\26869\Desktop\game\Solidwork\resource**

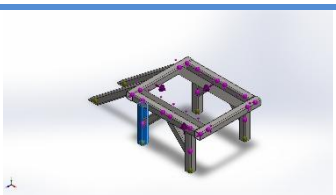		Section Area: 0.00167035m^2 Length:412.75mm Volume:0.000689437m^3 Mass Density:7,900kg/m^3 Mass:5.44655kg Weight:53.3762N	model\第 47、48 课 \Welding bracket.SLDPRT
SolidBody 6(Imported17) 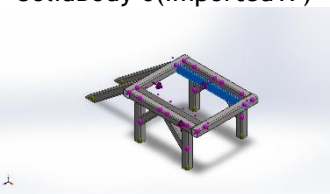	Beam - Uniform C/S	Section Standard-Custom Section Area: 0.000923659m^2 Length:914.4mm Volume:0.000844594m^3 Mass Density:7,900kg/m^3 Mass:6.67229kg Weight:65.3885N	C:\Users\26869\Desktop\game\Solidwork\resource\model\第 47、48 课 \Welding bracket.SLDPRT
SolidBody 7(Imported2) 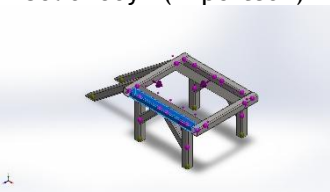	Beam - Uniform C/S	Section Standard-Custom Section Area: 0.00167035m^2 Length:762mm Volume:0.00127281m^3 Mass Density:7,900kg/m^3 Mass:10.0552kg Weight:98.5407N	C:\Users\26869\Desktop\game\Solidwork\resource\model\第 47、48 课 \Welding bracket.SLDPRT
SolidBody 8(Imported10) 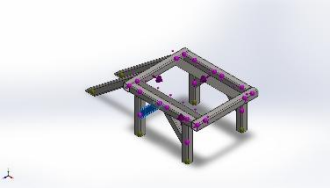	Beam - Uniform C/S	Section Standard-Custom Section Area: 0.00167035m^2 Length:242.467mm Volume:0.000405008m^3 Mass Density:7,900kg/m^3 Mass:3.19956kg Weight:31.3557N	C:\Users\26869\Desktop\game\Solidwork\resource\model\第 47、48 课 \Welding bracket.SLDPRT
SolidBody 9(Imported18) 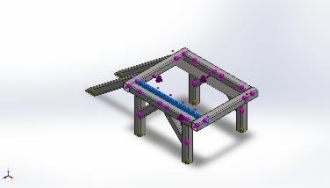	Beam - Uniform C/S	Section Standard-Custom Section Area: 0.000923659m^2 Length:914.4mm Volume:0.000844594m^3 Mass Density:7,900kg/m^3 Mass:6.67229kg Weight:65.3885N	C:\Users\26869\Desktop\game\Solidwork\resource\model\第 47、48 课 \Welding bracket.SLDPRT
SolidBody 10(Imported3) 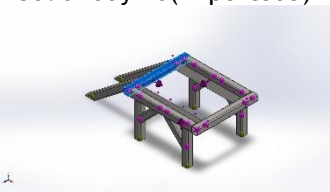	Beam - Uniform C/S	Section Standard-Custom Section Area: 0.00167035m^2 Length:749.3mm Volume:0.00125159m^3 Mass Density:7,900kg/m^3 Mass:9.88759kg Weight:96.8984N	C:\Users\26869\Desktop\game\Solidwork\resource\model\第 47、48 课 \Welding bracket.SLDPRT

SolidBody 11(Imported11) 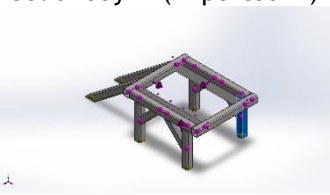	Beam - Uniform C/S	**Section Standard-Custom Section Area: 0.00167035m^2 Length:412.75mm Volume:0.000689437m^3 Mass Density:7,900kg/m^3 Mass:5.44655kg Weight:53.3762N**	**C:\Users\26869\Desktop\game\Solidwork\resource\model\第 47、48 课\Welding bracket.SLDPRT**
SolidBody 12(Imported4) 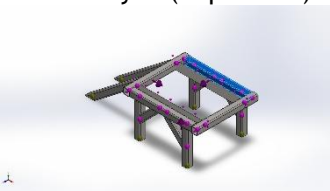	Beam - Uniform C/S	**Section Standard-Custom Section Area: 0.00167035m^2 Length:762mm Volume:0.00127281m^3 Mass Density:7,900kg/m^3 Mass:10.0552kg Weight:98.5407N**	**C:\Users\26869\Desktop\game\Solidwork\resource\model\第 47、48 课\Welding bracket.SLDPRT**
SolidBody 13(Imported12) 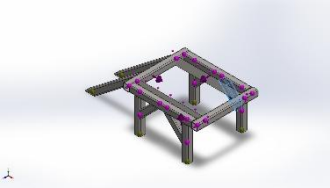	Beam - Uniform C/S	**Section Standard-Custom Section Area: 0.00167035m^2 Length:242.467mm Volume:0.000405008m^3 Mass Density:7,900kg/m^3 Mass:3.19956kg Weight:31.3557N**	**C:\Users\26869\Desktop\game\Solidwork\resource\model\第 47、48 课\Welding bracket.SLDPRT**
SolidBody 14(Imported5) 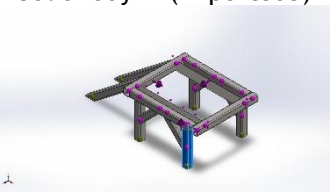	Beam - Uniform C/S	**Section Standard-Custom Section Area: 0.00167035m^2 Length:412.75mm Volume:0.000689437m^3 Mass Density:7,900kg/m^3 Mass:5.44655kg Weight:53.3762N**	**C:\Users\26869\Desktop\game\Solidwork\resource\model\第 47、48 课\Welding bracket.SLDPRT**
SolidBody 15(Imported13) 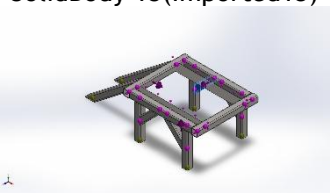	Beam - Uniform C/S	**Section Standard-Custom Section Area: 0.00167035m^2 Length:242.467mm Volume:0.000405008m^3 Mass Density:7,900kg/m^3 Mass:3.19956kg Weight:31.3557N**	**C:\Users\26869\Desktop\game\Solidwork\resource\model\第 47、48 课\Welding bracket.SLDPRT**
SolidBody 16(Imported6) 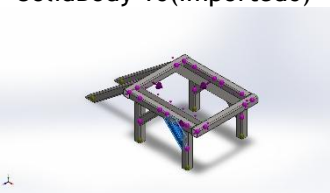	Beam - Uniform C/S	**Section Standard-Custom Section Area: 0.00167035m^2 Length:242.467mm Volume:0.000405008m^3 Mass Density:7,900kg/m^3 Mass:3.19956kg Weight:31.3557N**	**C:\Users\26869\Desktop\game\Solidwork\resource\model\第 47、48 课\Welding bracket.SLDPRT**

SolidBody 17(Imported14) 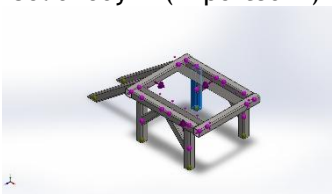	Beam - Uniform C/S	**Section Standard-Custom Section Area: 0.00167035m^2 Length:412.75mm Volume:0.000689437m^3 Mass Density:7,900kg/m^3 Mass:5.44655kg Weight:53.3762N**	**C:\Users\26869\Desktop\game\Solidwork\resource\model\第 47、48 课\Welding bracket.SLDPRT**

Study Properties

Study name	Response spectrum analysis
Analysis type	Linear dynamic analysis (Response Spectrum Analysis)
Mesh type	Beam Mesh
Number of frequencies	45
Decouple the mixed free body modes	Off
Solver type	FFEPlus
Soft Spring:	Off
Incompatible bonding options	Automatic
Thermal option	Include temperature loads
Zero strain temperature	298 Kelvin
Include fluid pressure effects from SOLIDWORKS Flow Simulation	Off
Mode combination method	Square root sum of squares (SRSS)
Result folder	SOLIDWORKS document (C:\Users\26869\Desktop\game\Solidwork\resource\model\第 47、48 课)

Units

Unit system:	SI (MKS)
Length/Displacement	mm
Temperature	Kelvin
Angular velocity	Rad/sec
Pressure/Stress	N/m^2

Material Properties

Model Reference	Properties	Components
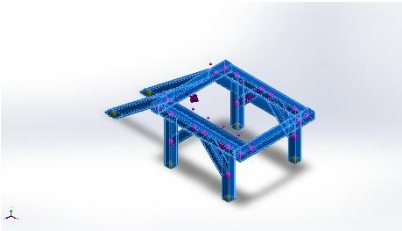	**Name:** AISI 1020 **Model type:** Linear Elastic Isotropic **Default failure criterion:** Max von Mises Stress **Yield strength:** 3.51571e+08 N/m^2 **Tensile strength:** 4.20507e+08 N/m^2 **Elastic modulus:** 2e+11 N/m^2 **Poisson's ratio:** 0.29 **Mass density:** 7,900 kg/m^3 **Shear modulus:** 7.7e+10 N/m^2 **Thermal expansion coefficient:** 1.5e-05 /Kelvin	SolidBody 1(Imported15)(Welding bracket), SolidBody 3(Imported16)(Welding bracket), SolidBody 4(Imported1)(Welding bracket), SolidBody 5(Imported9)(Welding bracket), SolidBody 6(Imported17)(Welding bracket), SolidBody 7(Imported2)(Welding bracket), SolidBody 8(Imported10)(Welding bracket), SolidBody 9(Imported18)(Welding bracket), SolidBody 10(Imported3)(Welding bracket), SolidBody 11(Imported11)(Welding bracket), SolidBody 12(Imported4)(Welding bracket), SolidBody 13(Imported12)(Welding bracket), SolidBody 14(Imported5)(Welding bracket), SolidBody 15(Imported13)(Welding bracket), SolidBody 16(Imported6)(Welding bracket), SolidBody 17(Imported14)(Welding bracket)
Curve Data:N/A		

Loads and Fixtures

Fixture name	Fixture Image	Fixture Details
Fixed-1	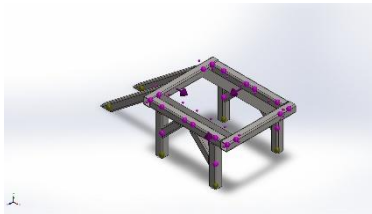	**Entities:** 6 Joint(s) **Type:** Fixed Geometry

Load name	Load Image	Load Details	Function Curve
Base Excitation-1	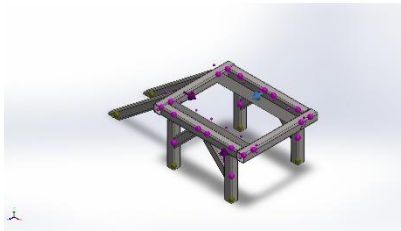	**Type:** Acceleration **Translation:** ---, ---, 0.4 **Units:** in, rad **Phase Angle:** 0 **Units:** deg	Frequency curve
Copy[1] Base Excitation-1	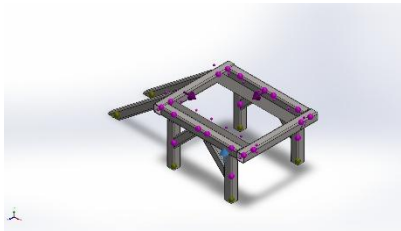	**Type:** Acceleration **Translation:** ---, 1, --- **Units:** in, rad **Phase Angle:** 0 **Units:** deg	Frequency curve
Copy[1] Base Excitation-1{1}	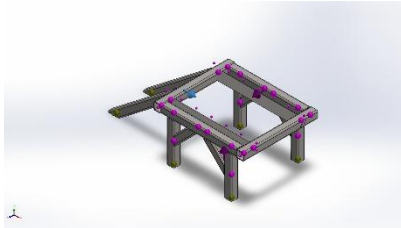	**Type:** Acceleration **Translation:** 0.4, ---, --- **Units:** in, rad **Phase Angle:** 0 **Units:** deg	Frequency curve

Connector Definitions

No Data

Interaction Information

Interaction	Interaction Image	Interaction Properties
Global Interaction	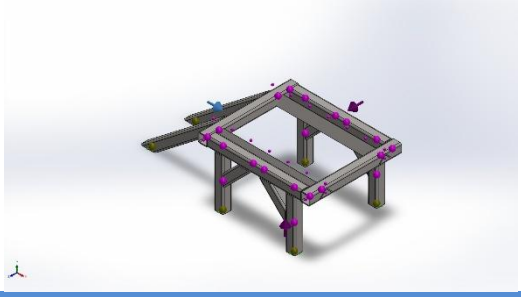	**Type:** Bonded **Components:** 1 component(s) **Options:** Independent mesh

Mesh information

Mesh type	Beam Mesh

Mesh information - Details

Total Nodes	558
Total Elements	548
Time to complete mesh(hh;mm;ss):	00:00:01
Computer name:	REMY

Mesh Control Information:

Mesh Control Name	Mesh Control Image	Mesh Control Details
Control-2	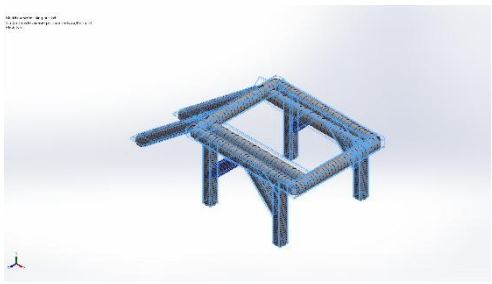	**Entities:** 18 Beam (s) **Number of Elements:** 30

Mesh Quality Plots

Name	Type	Min	Max
Quality1	Mesh	-	-

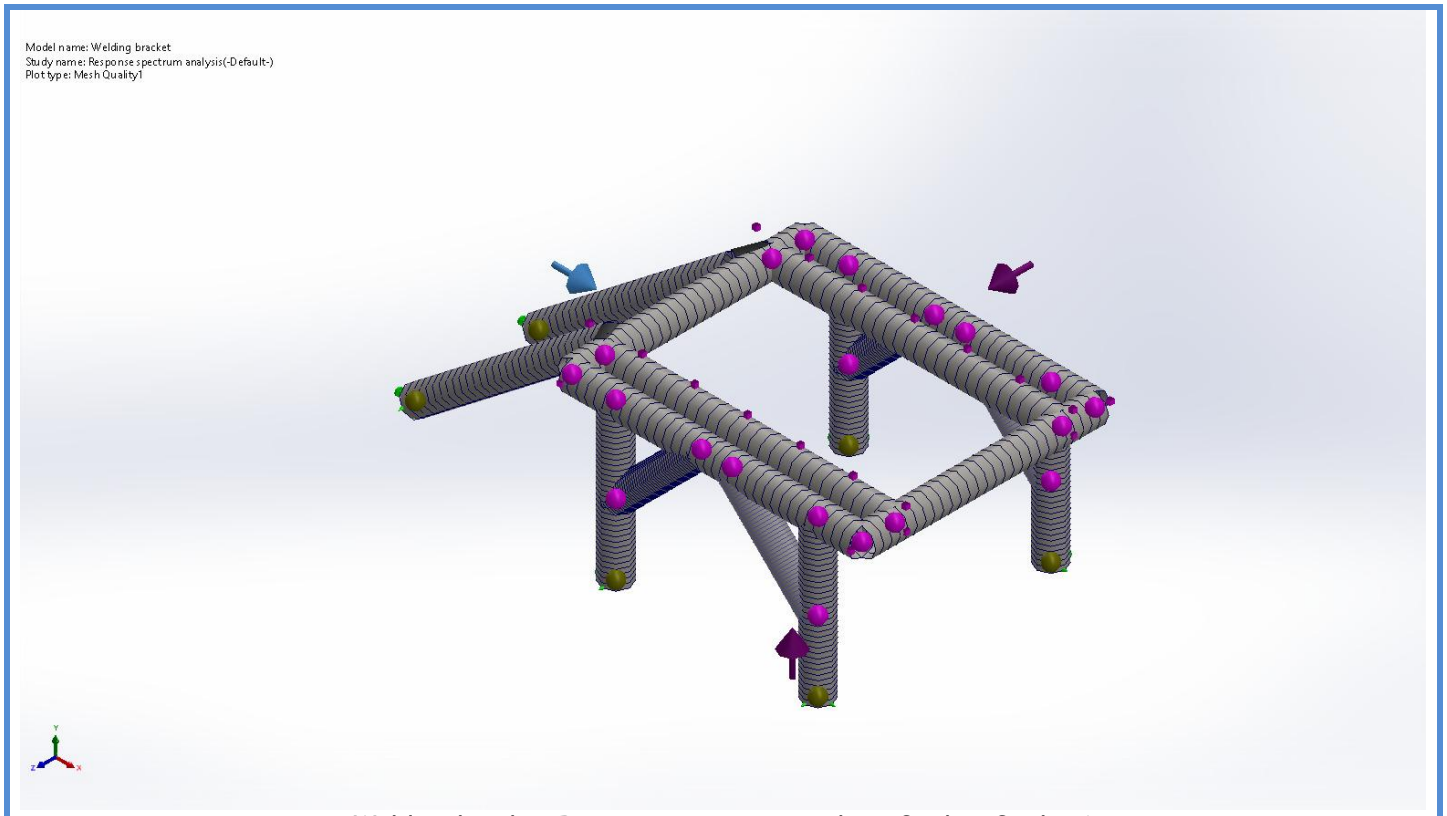

Welding bracket-Response spectrum analysis-Quality-Quality1

Sensor Details

No Data

Study Results

Name	Type	Min	Max
Stress1	Upper bound axial and bending	0.000e+00N/m^2 Element: 543	8.095e+07N/m^2 Element: 121

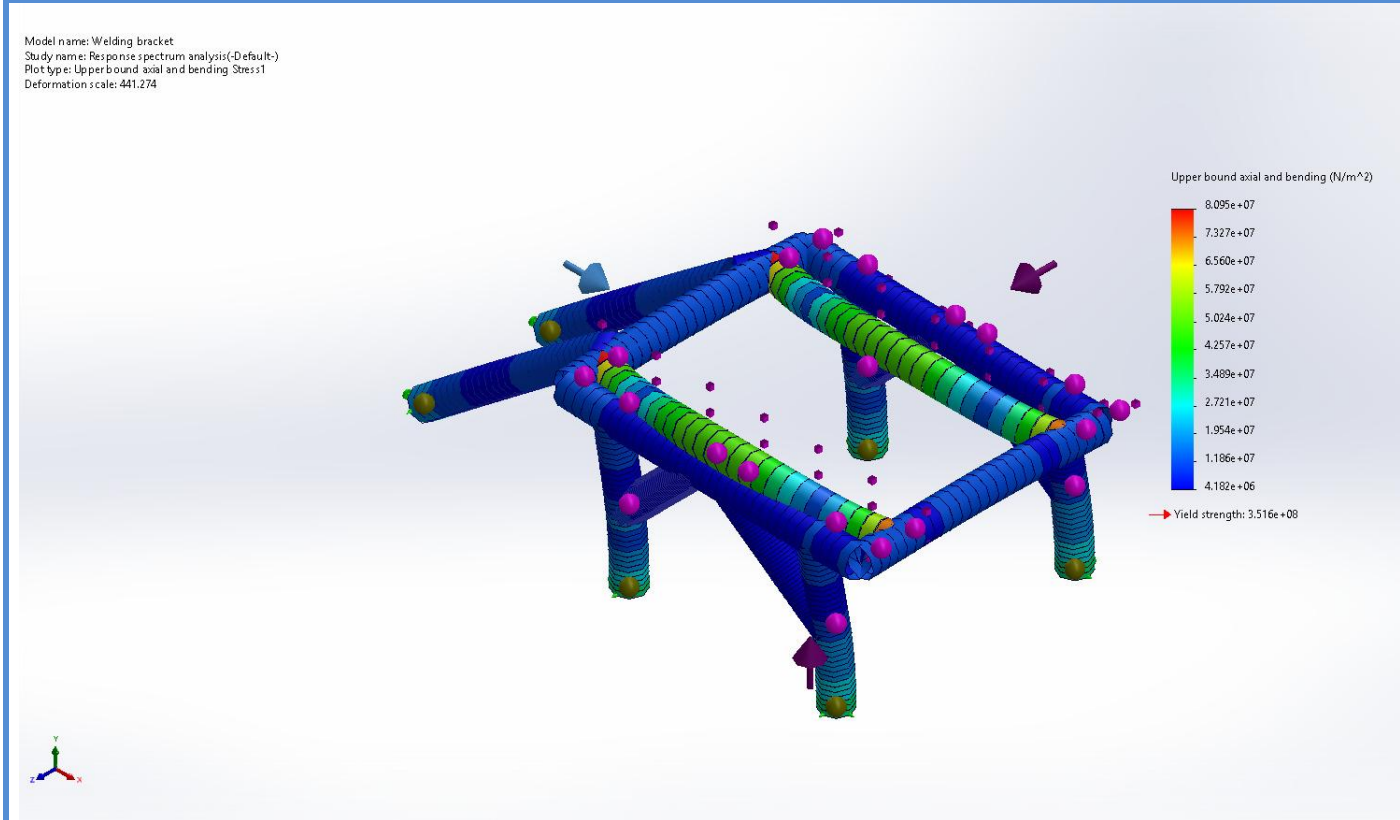

Welding bracket-Response spectrum analysis-Stress-Stress1

Name	Type	Min	Max
Displacement1	URES: Resultant Displacement	0.000e+00mm Node: 1	3.723e-01mm Node: 139

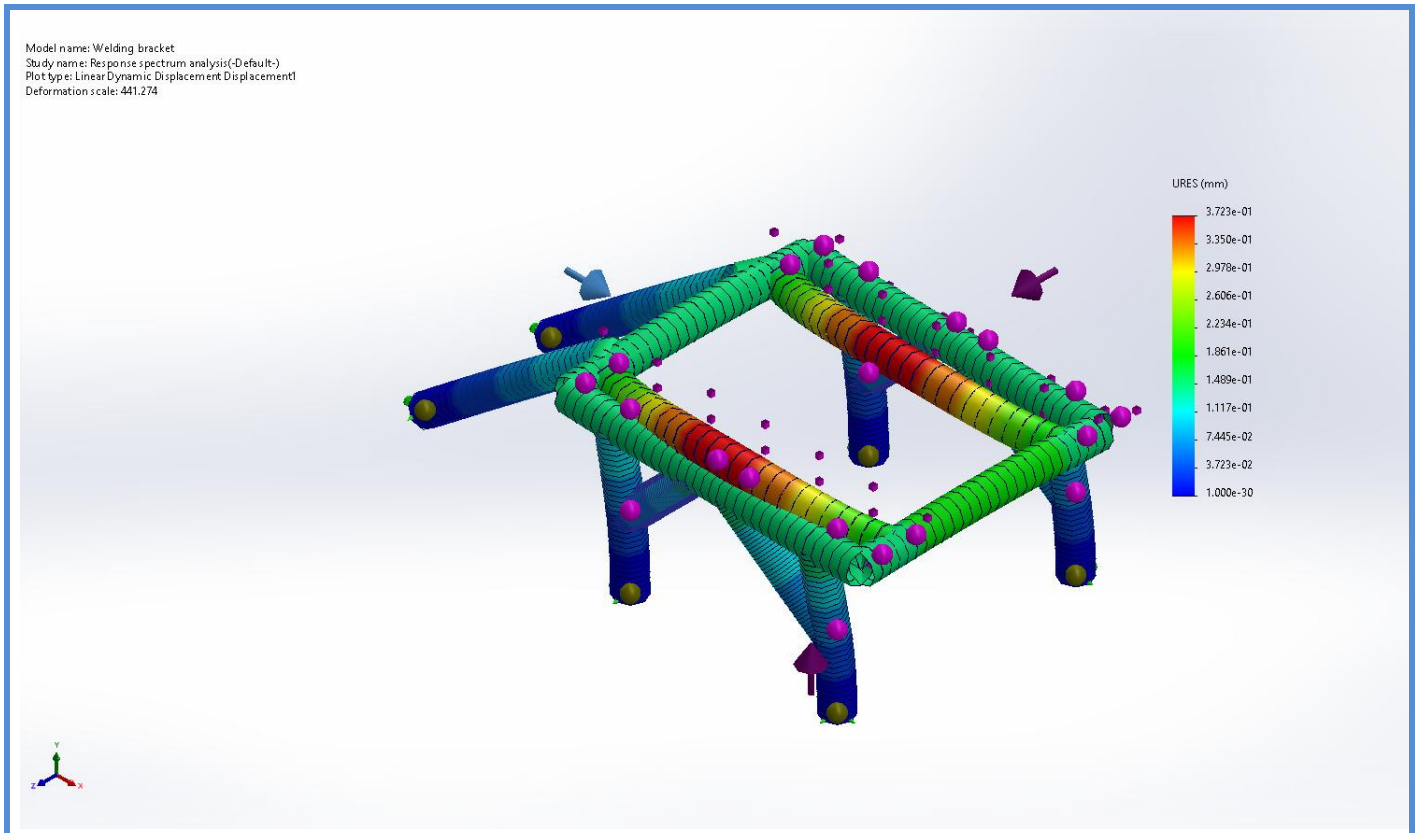

Welding bracket-Response spectrum analysis-Displacement-Displacement1

Mass Participation (Normalized)

Mode Number	Frequency(Hertz)	X direction	Y direction	Z direction
1	146.97	8.1039e-15	7.7629e-12	0.60945
2	171.02	1.2254e-06	4.8177e-05	1.2658e-15
3	187.56	1.393e-13	4.0121e-11	0.1945
4	256.12	8.1175e-15	2.675e-15	0.012746
5	327.11	0.023704	0.12935	4.2257e-12
6	343.43	0.0016165	2.3524e-05	2.0409e-13
7	345.29	2.3937e-12	6.77e-13	0.00053866
8	354.6	1.3903e-11	1.5858e-12	0.00084581
9	387.99	0.59153	0.037843	4.8116e-14
10	426.18	0.0059609	0.0056727	2.8961e-14
11	484.26	7.9797e-14	1.7818e-13	0.0012629
12	500.44	0.0033852	0.05611	4.2636e-13
13	513.71	1.6176e-13	3.3868e-12	0.00020751

14	516.29	6.2911e-07	0.006086	8.2366e-13
15	575.5	4.0212e-13	1.657e-14	0.00021596
16	605.57	0.10837	0.085218	1.4267e-14
17	670.63	5.2112e-13	4.2766e-13	0.0031446
18	686.23	0.00021667	1.0051e-05	1.074e-13
19	688.78	6.133e-13	3.0913e-13	1.2963e-07
20	771.06	0.020423	0.0016312	1.0598e-13
21	801.61	0.06868	0.012038	1.2942e-13
22	804.5	0.016263	0.0083967	1.1117e-13
23	830.54	2.1735e-12	1.1485e-12	0.010367
24	855.13	0.00064536	0.00028648	2.2461e-13
25	856.59	1.6039e-14	1.9939e-13	0.0020415
26	887.01	1.4633e-12	1.0871e-12	0.0011226
27	943.05	3.0827e-05	0.0033001	3.9642e-13
28	1,006	2.9144e-12	1.7062e-11	0.0069741
29	1,020.5	5.6354e-05	9.9303e-05	1.4962e-17
30	1,021.1	5.3406e-13	2.0327e-12	3.8866e-05
31	1,032.5	0.013391	0.041972	1.316e-12
32	1,045.2	3.6313e-13	9.2969e-13	0.00039875
33	1,115.3	0.0016014	0.22168	5.605e-16
34	1,132	8.9176e-14	7.5496e-18	0.00043086
35	1,182.4	0.00010713	0.0010307	2.2687e-12
36	1,183.9	8.2905e-15	7.1617e-12	0.001532
37	1,185.9	1.1463e-15	3.7604e-16	0.0010757
38	1,196.2	0.0026776	0.0025836	4.2503e-14
39	1,279.5	8.9766e-14	3.4903e-12	0.00073271
40	1,339.1	0.00043983	0.019377	1.5981e-13
41	1,342.6	6.8646e-11	3.5282e-10	2.8542e-05
42	1,343.8	0.01938	0.13644	1.0157e-14
43	1,353.6	0.0030856	0.0077806	4.2439e-14
44	1,404.4	8.5513e-15	3.1887e-14	0.056965

45	1,449.9	0.0017184	0.010279	1.753e-15
		Sum X = 0.88329	Sum Y = 0.78726	Sum Z = 0.90461

Conclusion

Appendix